MECHANICAL JOINT FITTINGS

Ductile Iron - C110







PIPE

FABRICATION

RESTRAINED JOINTS

FITTINGS

GASKETS

COATINGS & LININGS

U.S. PIPE

A QUIKRETE® COMPANY

CONTENTS

Mechanical Joint Fittings	**3**
Standard Mechanical Joint Dimensions	**4**
Plain End Dimensions	**5**
90º Bends	**6**
45º Bends	**7**
22.5º Bends	**8**
11.25º Bends	**9**
Tees and Crosses	**10**
Base Bends	**12**
Base Tees	**13**
Base Drilling Details for Base Bends and Base Tees	**14**
Reducers	**15**
Solid Sleeves	**16**
Connecting Pieces, One End Flanged	**17**
Caps and Plugs	**18**
Wye Branches	**19**
Products for Water, Wastewater and Fire Protection	**20**



MECHANICAL JOINT FITTINGS

ANSI/AWWA STANDARDS

ANSI/AWWA C110/A21.10, Ductile-Iron and Gray-Iron Fittings for Water

ANSI/AWWA C111/A21.11, Rubber Gasket Joints for Ductile-Iron Pressure Pipe and Fittings. Mechanical Joint Fittings and accessories are made to meet all applicable requirements of ANSI/AWWA C110/A21.10, 3" through 48" and ANSI/AWWA C111/A21.11.

ANSI/AWWA C104/A.21.4, Cement-Mortar Lining for Ductile-Iron Pipe and Fittings for Water. Fittings are cement-mortar lined and coated with an asphaltic material, inside and outside, in accordance with ANSI/AWWA C104/A21.4.

NSF Certified to ANSI/NSF 61

U.S. Pipe's C110

Mechanical Joint Fittings are available in 30" through 48" sizes. Wye branches are not covered by C110/A21.10, are made to U.S. Pipe Standards and meet all applicable wall thickness and strength requirement of ANSI/AWWA C110/A21.10.

Caps, plugs and sleeves are not furnished with cement-mortar linings. For special conditions, Mechanical Joint Fittings with special coatings and/or linings can be supplied.

Glands, bolts and gaskets are required in sufficient quantities for each socket opening. The weights of these accessories are not included in the fittings weights shown herein.

NOTE: If specifiers and users believe that corrosive soils will be encountered where our products are to be installed, please refer to ANSI/AWWA C105/A21.5 Polyethylene Encasement for Ductile Pipe Systems for proper external protection procedures.

Fittings may be zinc coated with metalized zinc in accordance with ISO 8179, Part 1, or coated with a zinc righ paint meeting ISO 8179, Part 2 depending on the manufacturing location.

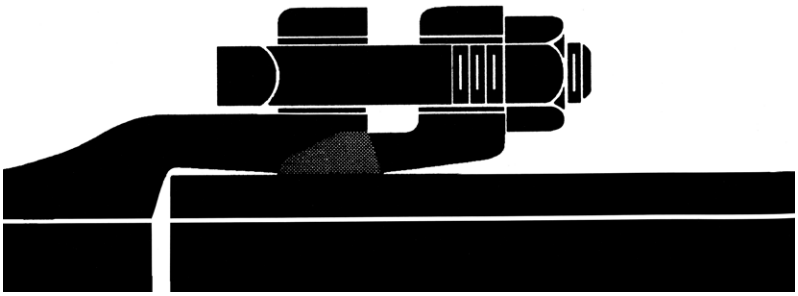

STANDARD MECHANICAL JOINT DIMENSIONS

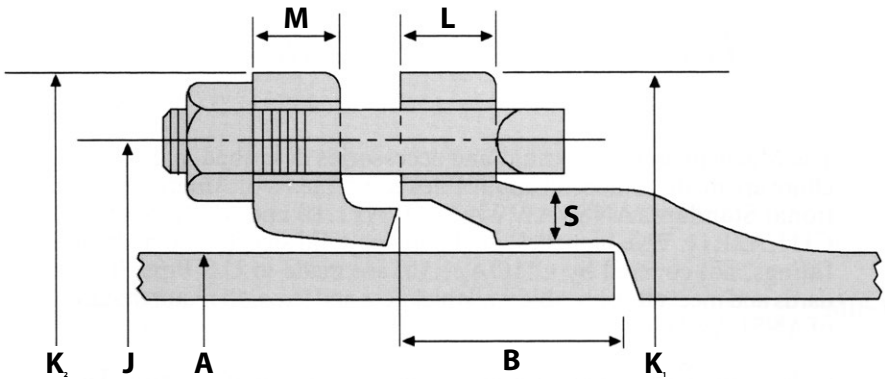

SIZE INCHES	PLAIN END	DIMENSIONS INCHES							BOLTS			WEIGHT POUNDS	
	A	B	J	K_1	K_2	L	M	S	QTY.	SIZE	LENGTH	BELL	GLAND BOLTS GASKET
3	3.96	2.50	6.19	7.69	7.69	.94	.62	.52	4	⅝	3	11	7
4	4.80	2.50	7.50	9.12	9.12	1.00	.75	.65	4	¾	3½	16	10
6	6.90	2.50	9.50	11.12	11.12	1.06	.88	.70	6	¾	3½	23	16
8	9.05	2.50	11.75	13.37	13.37	1.12	1.00	.75	6	¾	4	31	25
10	11.10	2.50	14.00	15.69	15.62	1.19	1.00	.80	8	¾	4	41	30
12	13.20	2.50	16.25	17.94	17.88	1.25	1.00	.85	8	¾	4	51	40
14	15.30	3.50	18.75	20.31	20.25	1.31	1.25	.89	10	¾	4½	79	45
16	17.40	3.50	21.00	22.56	22.50	1.38	1.31	.97	12	¾	4½	97	55
18	19.50	3.50	23.25	24.83	24.75	1.44	1.38	1.05	12	¾	4½	117	65
20	21.60	3.50	25.50	27.08	27.00	1.50	1.44	1.12	14	¾	4½	140	85
24	25.80	3.50	30.00	31.58	31.50	1.62	1.56	1.22	16	¾	5	185	105
30	32.00	4.00	36.88	39.12	39.12	1.81	1.31	1.50	20	1	6	315	165
36	38.30	4.00	43.75	46.00	46.00	2.00	1.55	1.80	24	1	6	445	235
42	44.50	4.00	50.62	53.12	53.12	2.00	2.00	1.95	28	1¼	6	570	400
48	50.80	4.00	57.50	60.00	60.00	2.00	2.00	2.20	32	1¼	6	725	475

The bolt holes in the fitting flanges straddle the vertical center line when the fitting is positioned to change the fluid flow in a horizontal direction.

PLAIN END DIMENSIONS

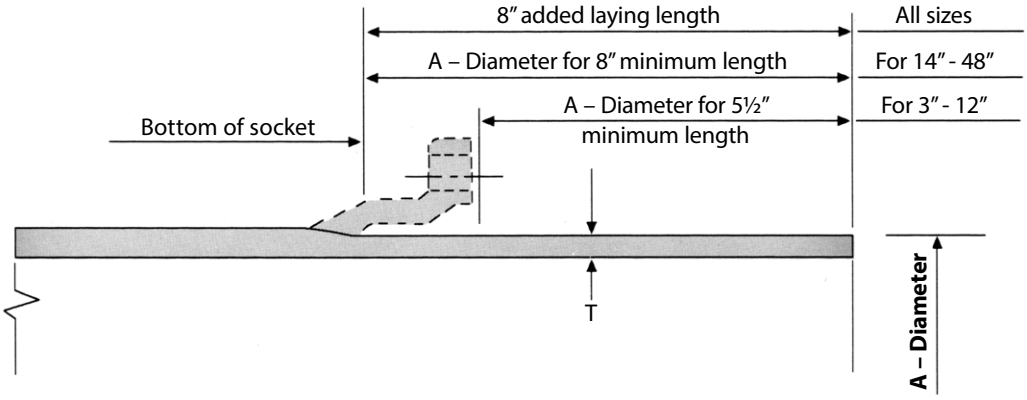

SIZES INCHES	DIMENSIONS INCHES		WEIGHT POUNDS
	A	T	PLAIN END
3	3.96	.48	11
4	4.80	.47	13
6	6.90	.50	21
8	9.05	.54	30
10	11.10	.60	41
12	13.20	.68	56
14	15.30	.66	63
16	17.40	.70	76
18	19.50	.75	92
20	21.60	.80	109
24	25.80	.89	145
30	32.00	1.03	208
36	38.30	1.15	279
42	44.50	1.28	361
48	50.80	1.42	458

NOTE: Bell contour shown indicates bottom of socket in a standard all bell fitting.

90° BENDS

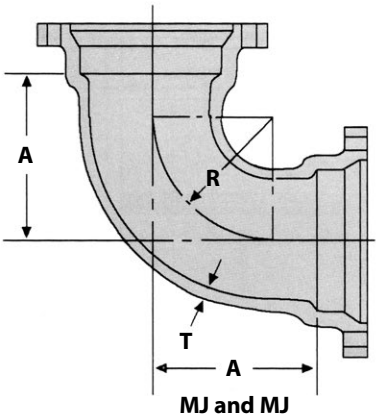

MJ and MJ

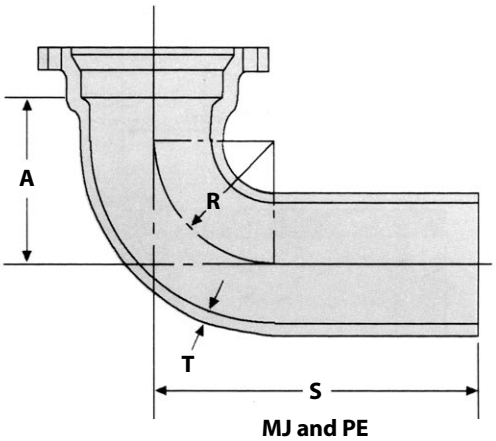

MJ and PE

SIZE INCHES	PRESSURE RATING PSI	DIMENSIONS INCHES				WEIGHT POUNDS	
		T	A	S	R	MJ & MJ	MJ & PE
30	250	1.03	25.0	33.0	21.5	1690	1585
36	250	1.15	28.0	36.0	24.5	2475	2310
42	250	1.28	31.0	39.0	27.5	3410	3200
48	250	1.42	34.0	42.0	30.5	4595	4330

For dimensions of Mechanical Joints see page 3.
For dimensions of plain ends see page 4.

45° BENDS

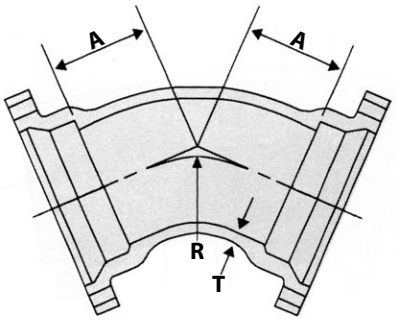

MJ and MJ

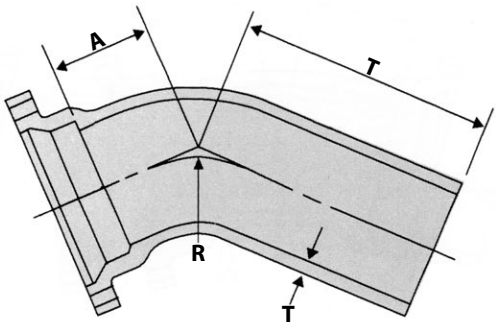

MJ and PE

SIZE INCHES	PRESSURE RATING PSI	DIMENSIONS INCHES				WEIGHT POUNDS	
		T	A	S	R	MJ & MJ	MJ & PE
30	250	1.03	15.0	23.0	27.75	1380	1275
36	250	1.15	18.0	26.0	35.00	2095	1930
42	250	1.28	21.0	29.0	42.25	2955	2745
48	250	1.42	24.0	32.0	49.50	4080	3815

For dimensions of Mechanical Joints see page 3.
For dimensions of plain ends see page 4.

22.5° BENDS

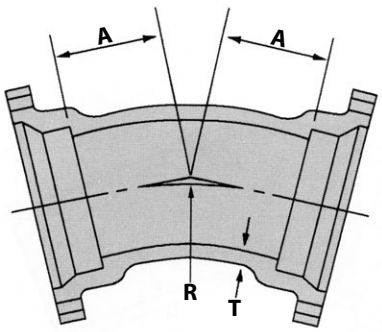

MJ and MJ

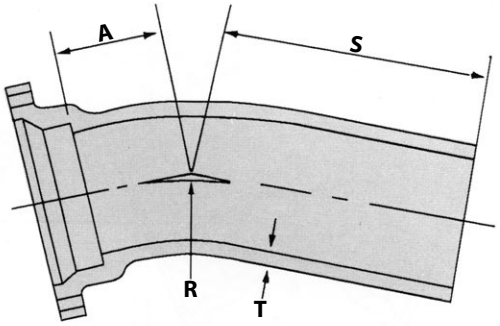

MJ and PE

SIZE INCHES	PRESSURE RATING PSI	DIMENSIONS INCHES				WEIGHT POUNDS	
		T	A	S	R	MJ & MJ	MJ & PE
30	250	1.03	15.0	23.0	57.81	1400	1295
36	250	1.15	18.0	26.0	72.88	2135	1970
42	250	1.28	21.0	29.0	88.00	3020	2810
48	250	1.42	24.0	32.0	103.06	4170	3905

For dimensions of Mechanical Joints see page 3.
For dimensions of plain ends see page 4.

11.25° Bends

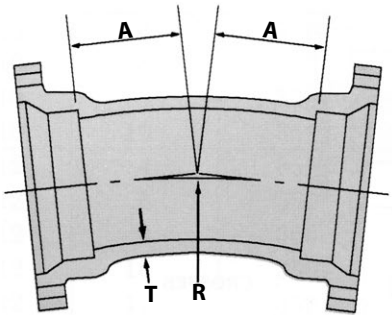

MJ and MJ

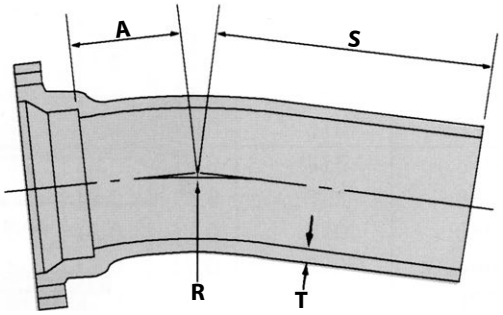

MJ and PE

SIZE INCHES	PRESSURE RATING PSI	DIMENSIONS INCHES				WEIGHT POUNDS	
		T	A	S	R	MJ & MJ	MJ & PE
30	250	1.03	15.0	23.0	116.75	1410	1305
36	250	1.15	18.0	26.0	147.25	2145	1980
42	250	1.28	21.0	29.0	177.69	3035	2825
48	250	1.42	24.0	32.0	208.12	4190	3925

For dimensions of Mechanical Joints see page 3.

For dimensions of plain ends see page 4.

TEES AND CROSSES

TEES

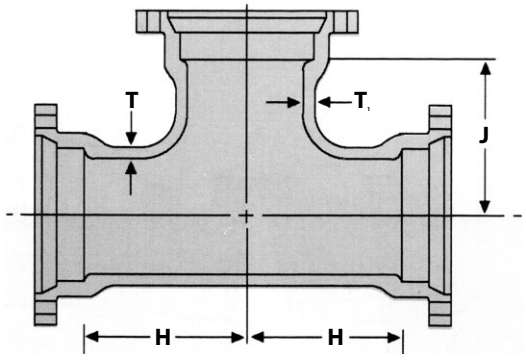

All MJ

CROSSES

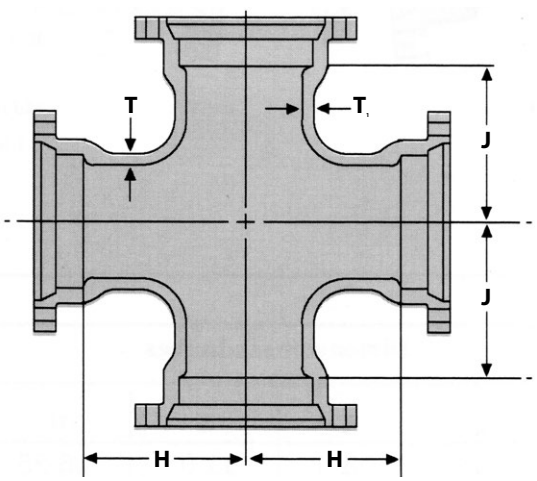

All MJ

SIZE INCHES		PRESSURE RATING PSI	DIMENSIONS INCHES				WEIGHT POUNDS	
RUN	BRANCH		T	T_1	H	J	TEES ALL MJ	CROSSES ALL MJ
30	6	250	1.03	.55	18.0	23.0	1730	1770
30	8	250	1.03	.60	18.0	23.0	1745	1795
30	10	250	1.03	.68	18.0	23.0	1760	1830
30	12	250	1.03	.75	18.0	23.0	1780	1865
30	14	250	1.03	.66	18.0	23.0	1800	1905
30	16	250	1.03	.70	18.0	23.0	1820	1950
30	18	250	1.03	.75	18.0	23.0	1845	2000
30	20	250	1.03	.80	18.0	23.0	1875	2060
30	24	250	1.03	.89	25.0	25.0	2400	2675
30	30	250	1.03	1.03	25.0	25.0	2595	3075
36	8	250	1.15	.60	20.0	26.0	2520	2565
36	10	250	1.15	.68	20.0	26.0	2535	2600
36	12	250	1.15	.75	20.0	26.0	2550	2630
36	14	250	1.15	.66	20.0	26.0	2570	2665
36	16	250	1.15	.70	20.0	26.0	2585	2705

NOTE: Flanged outlets can be furnished on a variety of Mechanical Joint Tees.
For dimensions of Mechanical Joints see page 3.

TEES AND CROSSES
(Continued)

SIZE INCHES		PRESSURE RATING PSI	DIMENSIONS INCHES				WEIGHT POUNDS	
RUN	BRANCH		T	T_1	H	J	TEES ALL MJ	CROSSES ALL MJ
36	18	250	1.15	.75	20.0	26.0	2610	2750
36	20	250	1.15	.80	20.0	26.0	2635	2805
36	24	250	1.15	.89	20.0	26.0	2690	2910
36	30	250	1.15	1.03	28.0	28.0	3545	3965
36	36	250	1.15	1.15	28.0	28.0	3745	4370
42	12	250	1.28	.75	23.0	30.0	3555	3640
42	14	250	1.28	.66	23.0	30.0	3575	3675
42	16	250	1.28	.70	23.0	30.0	3595	3715
42	18	250	1.28	.75	23.0	30.0	3615	3755
42	20	250	1.28	.80	23.0	30.0	3640	3810
42	24	250	1.28	.89	23.0	30.0	3690	3910
42	30	250	1.28	1.03	31.0	31.0	4650	5040
42	36	150	1.28	1.15	31.0	31.0	4880	5425
42	36	250	1.78	1.58	31.0	31.0	6075	6655
42	30	250	1.28	1.03	31.0	31.0	4650	5040
42	36	150	1.28	1.15	31.0	31.0	4880	5425
42	36	250	1.78	1.58	31.0	31.0	6075	6655
42	42	150	1.28	1.28	31.0	31.0	5085	5840
42	42	250	1.78	1.78	31.0	31.0	6320	7145
48	12	250	1.42	.75	26.0	34.0	4870	4955
48	14	250	1.42	.66	26.0	34.0	4885	4985
48	16	250	1.42	.70	26.0	34.0	4905	5025
48	18	250	1.42	.75	26.0	34.0	4925	5065
48	20	250	1.42	.80	26.0	34.0	4950	5115
48	24	250	1.42	.89	26.0	34.0	4995	5210
48	30	250	1.42	1.03	26.0	34.0	5140	5495
48	36	250	1.42	1.15	34.0	34.0	6280	6790
48	42	150	1.42	1.28	34.0	34.0	6510	7150
48	42	250	1.96	1.78	34.0	34.0	8130	8815
48	48	150	1.42	1.42	34.0	34.0	6765	7655
48	48	250	1.96	1.96	34.0	34.0	8420	9380

NOTE: Flanged outlets can be furnished on a variety of Mechanical Joint Tees.
For dimensions of Mechanical Joints see page 3.

BASE BENDS

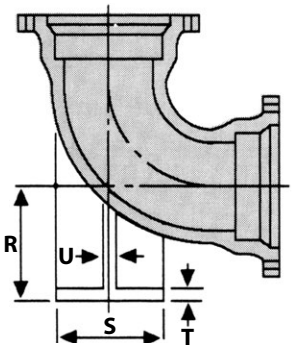

MJ and MJ

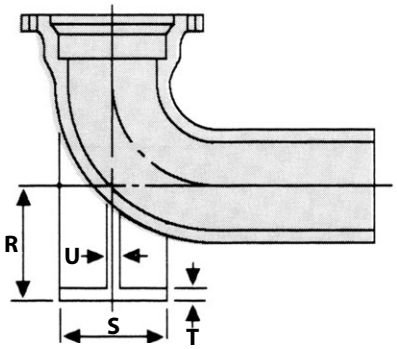

MJ and PE

SIZE INCHES	PRESSURE RATING PSI	DIMENSIONS INCHES				WEIGHT POUNDS		
		R	S DIA.	T	U	MJ & MJ	MJ & PE	BASE ONLY
30	250	23.00	16.00	1.19	1.15	1880	1775	190
36	250	26.00	19.00	1.25	1.15	2725	2560	250
42	250	30.00	23.50	1.44	1.28	3820	3610	410
48	250	34.00	25.00	1.56	1.42	5110	4845	515

Dimension "R" is a finished dimension; unfinished bases will be 1/8" longer.

For base drilling see page 13.

For other dimensions see table of Mechanical Joint 90º bends on page 5.

BASE TEES

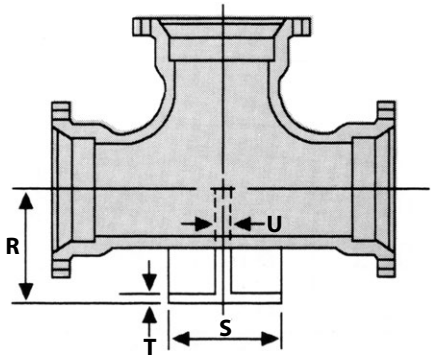

All MJ

SIZE INCHES	PRESSURE RATING PSI	DIMENSIONS INCHES				WEIGHT POUNDS	
		R	S DIAMETER	T	U	MJ & MJ	BASE ONLY
30	250	23.00	16.00	1.19	1.15	2715	120
36	250	26.00	19.00	1.25	1.15	3905	160
42	250	30.00	23.50	1.44	1.28	6590	270
48	250	34.00	25.00	1.56	1.42	8755	335

Dimension "R" is a finished dimension; unfinished bases will be 1/8" longer.

For base drilling see page 13.

For other dimensions see table of Mechanical Joint Tees and Crosses starting on page 9.

BASE DRILLING DETAILS FOR BASE BENDS AND BASE TEES

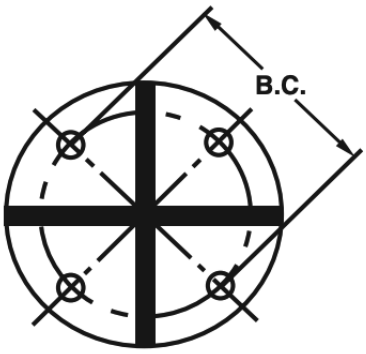

SIZE FITTING INCHES	DIMENSIONS INCHES		BOLTS
	BOLT CIRCLE	BOLT HOLE	QUANTITY
30	14.25	1	4
36	17.00	1	4
42	21.25	1-1/8	4
48	21.75	1-1/4	4

REDUCERS

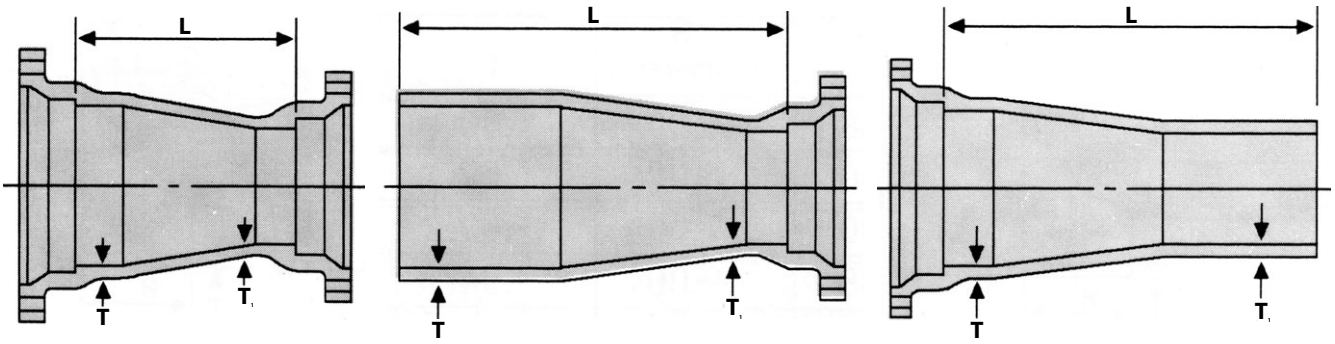

MJ and MJ **Small End MJ** **Large End MJ**

SIZE INCHES		PRESSURE RATING	THICKNESS INCHES		MJ AND MJ		SMAL END MJ		LARGE END MJ	
LARGE	SMALL		T	T_1	L INCHES	WEIGHT POUNDS	L INCHES	WEIGHT POUNDS	L INCHES	WEIGHT POUNDS
30	18	250	1.03	.75	30	990	38	885	38	965
30	20	250	1.03	.80	30	1050	38	945	38	1020
30	24	250	1.03	.89	30	1165	38	1060	38	1125
36	20	250	1.15	.80	36	1450	44	1285	44	1420
36	24	250	1.15	.89	36	1580	44	1410	44	1535
36	30	250	1.15	1.03	36	1855	44	1690	44	1750
42	20	250	1.28	.80	42	1915	50	1705	50	1880
42	24	250	1.28	.89	42	2060	50	1855	50	2020
42	30	250	1.28	1.03	42	2370	50	2165	50	2265
42	36	250	1.28	1.15	42	2695	50	2485	50	2530
48	30	250	1.42	1.03	48	3005	56	2740	56	2900
48	36	250	1.42	1.15	48	3370	56	3100	56	3205
48	42	250	1.42	1.28	48	3750	56	3480	56	3540

For dimensions of Mechanical Joints see page 3.

For dimensions of plain ends see page 4.

Eccentric reducers with the same dimensions and weights given for concentric reducers are available when specified on the purchase order.

SOLID SLEEVES

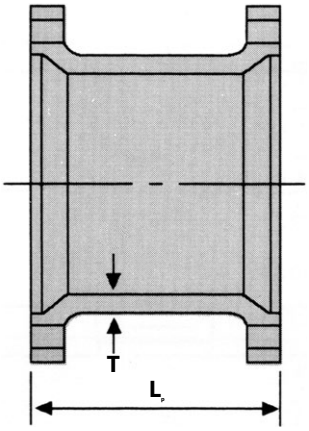

SIZE INCHES	PRESSURE RATING PSI		SOLID	
		T INCHES	L_p INCHES	WEIGHT POUNDS
30	250	1.37	24	1085
36	250	1.58	24	1495
42	250	1.78	24	1940
48	250	1.96	24	2405

For dimensions of Mechanical Joints see page 3.

We do not manufacture Split Sleeves. Our local sales office can obtain dimensions and prices for Split Sleeves produced by other manufacturers.

CONNECTING PIECES, ONE END FLANGED

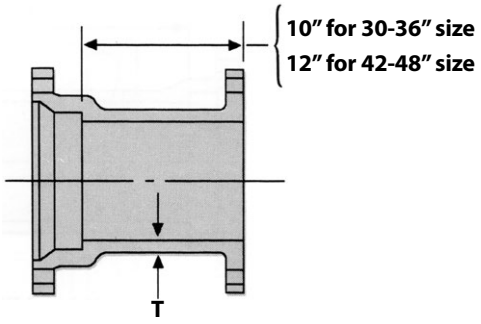

MJ and Flange

SIZE INCHES	PRESSURE RATING PSI		MJ & FLANGE
		T INCHES	WEIGHT POUNDS
30	250	1.03	760
36	250	1.15	1070
42	250	1.28	1505
48	250	1.42	1885

For dimensions of Mechanical Joints see page 4.

For dimensions of plain ends see page 5.

For dimensions of flanges see page 4 in the Flanged Fittings brochure.

MJ and Flange and PE connecting pieces may be furnished from centrifugally cast pipe.

CAPS AND PLUGS

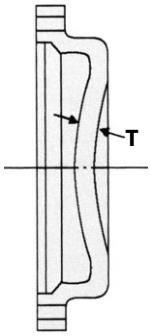

CAP

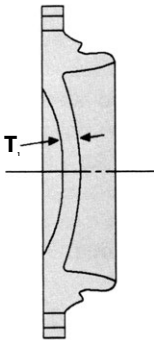

30" - 48"

PLUGS

SIZE INCHES	PRESSURE RATING PSI	CAPS		PLUGS	
		T INCHES	WEIGHT POUNDS	DIMENSIONS INCHES	WEIGHT POUNDS
30	250	1.37	680	1.37	660
36	250	1.58	1005	1.58	975
42	250	1.78	1535	1.78	1355
48	250	1.96	1950	1.96	1810

WYE BRANCHES

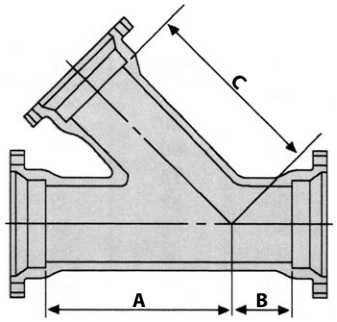

SIZE INCHES		PRESSURE RATING PSI	DIMENSIONS INCHES					WEIGHT POUNDS
			WALL THICKNESS					
RUN	BRANCH		RUN	BRANCH	A	B	C	
30	12	250	1.37	.75	49	10	49	2850
30	14	250	1.37	.82	49	10	49	2915
30	16	250	1.37	.89	49	10	49	2975
30	18	250	1.37	.96	49	10	49	3040
30	20	250	1.37	1.03	49	10	49	3115
30	24	250	1.37	1.16	49	10	49	3280
30	30	250	1.37	1.37	49	10	49	3670
36	12	250	1.58	.75	60	19.5	60	4895
36	14	250	1.58	.82	60	19.5	60	4970
36	16	250	1.58	.89	60	19.5	60	5040
36	18	250	1.58	.96	60	19.5	60	5120
36	20	250	1.58	1.03	60	19.5	60	5205
36	24	250	1.58	1.16	60	19.5	60	5390
36	30	250	1.58	1.37	60	19.5	60	5805
36	36	250	1.58	1.58	60	19.5	60	6335
42	20	250	1.78	1.03	60	12	60	6655
42	24	250	1.78	1.16	60	12	60	6810
42	30	250	1.78	1.37	69	20	69	7280
42	36	150	1.78	1.58	66	12	66	8355
42	42	150	1.78	1.78	71	15	71	9900
48	20	250	1.96	1.03	52	0	66	6545
48	24	250	1.96	1.16	58	5	64	7430
48	30	250	1.96	1.37	59	4	64	7925
48	36	250	1.96	1.58	64	5	68	9065
48	42	150	1.96	1.78	77	12	77	11940
48	48	150	1.96	1.96	77	16	77	13130

For dimensions of Mechanical Joints see page 3.

© 2026 U.S. Pipe. All rights reserved.

Mechanical Joint Fittings-C110 Submittal Document
(Rev. 08/2026)
Materials and specifications are subject to change without notice.

U.S. Pipe, TYTON JOINT®, HDSS®, TR FLEX®, HP LOK®, USIFLEX®, MJ FIELD LOK®, FIELD LOK 350®, TR FLEX GRIPPER®®, TR TELE FLEX®, TRIM TYTON®, XTRA FLEX®, RING FLANGE-TYTE®, FULL FACE FLANGE-TYTE®, their respective logos, as well as corporate and product identity used herein, are trademarks owned by U.S. Pipe or its affiliated companies and may not be used without permission. All other trademarks are the property of their respective owners.

Our products are manufactured in conformance with national standards so that our customers may be assured of getting the performance and longevity they expect. Use of accessories or other appurtenances that do not comply with recognized standards may jeopardize the performance and longevity of the project.

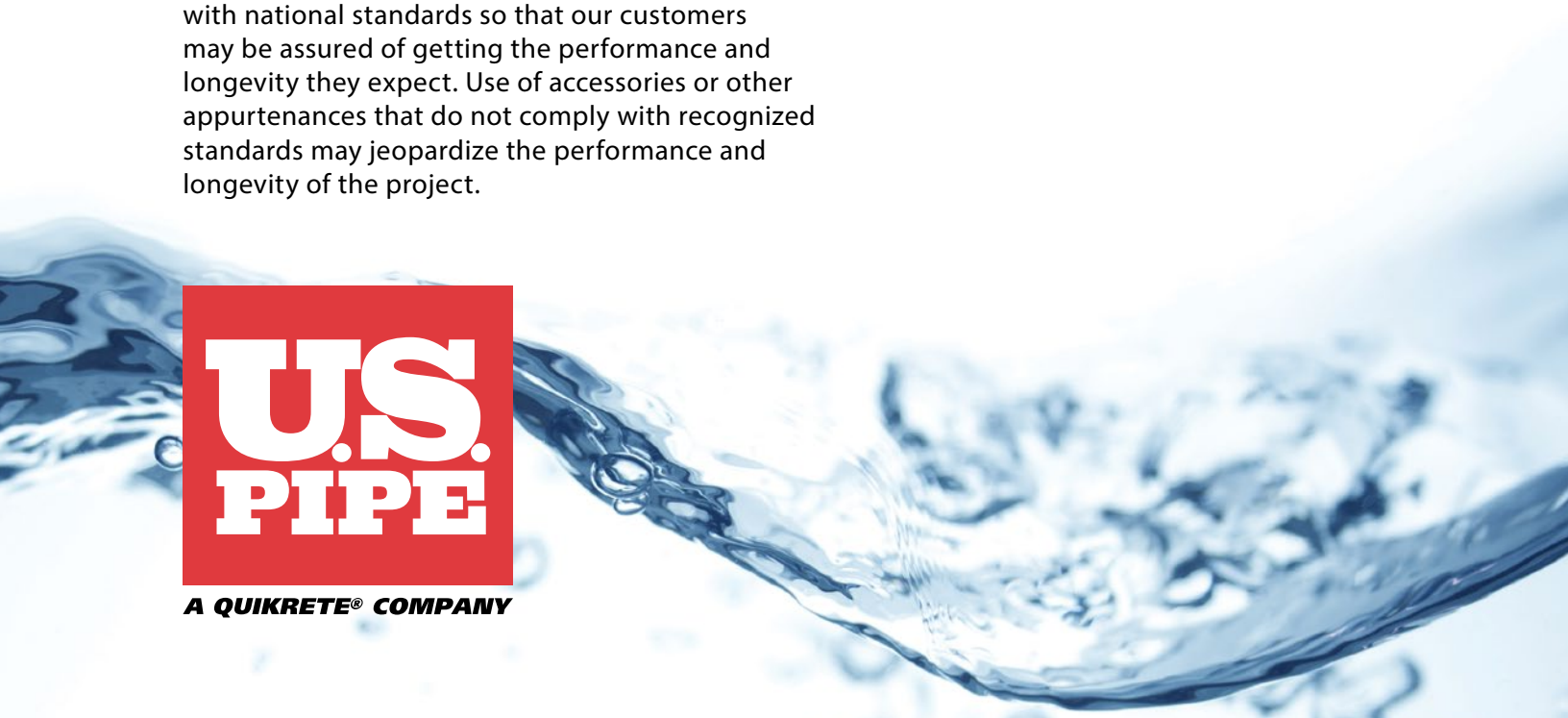

U.S. PIPE
A QUIKRETE® COMPANY

Headquarters
U.S. Pipe
Two Chase Corporate Drive
Suite 200
Birmingham, AL 35244

866-347-7473
info@uspipe.com
www.uspipe.com